ONE G2 60 | 80 | 100

Suspenso/ wall mounted/ suspendu/ suspendido

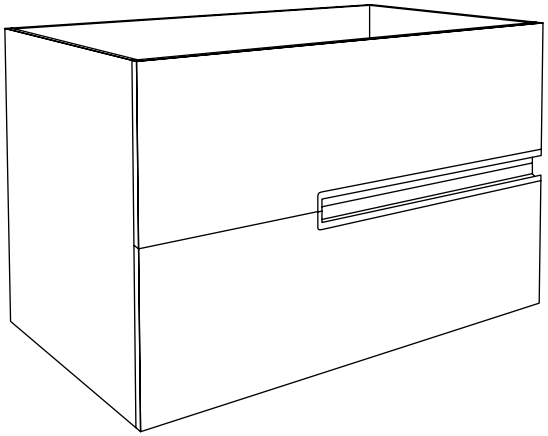

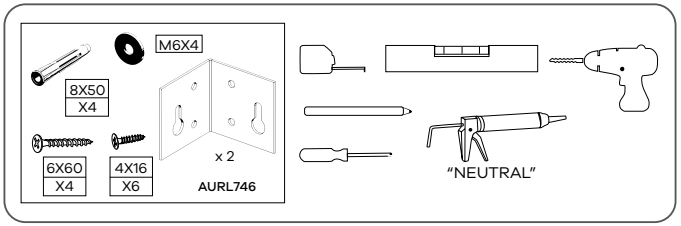

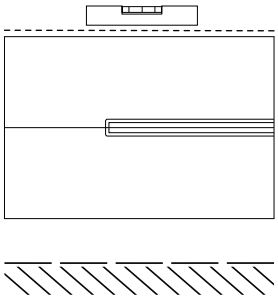
1

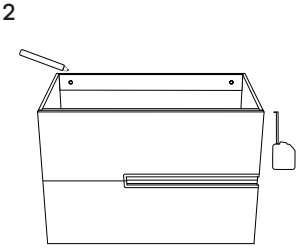
2

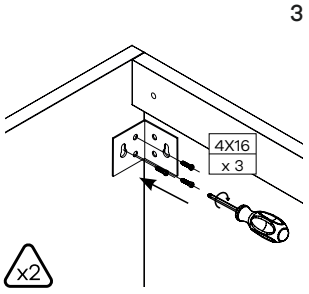
3
4X16
x 3
x2

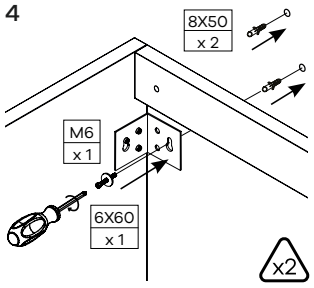
4
8X50
x 2
M6
x 1
6X60
x 1
x2

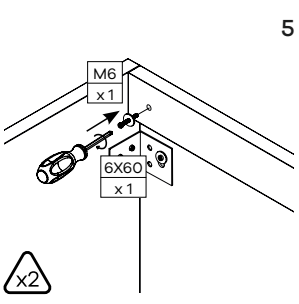
5
M6
x 1
6X60
x 1
x2

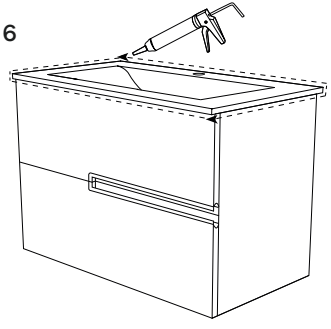
6

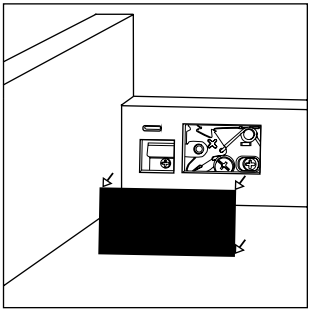

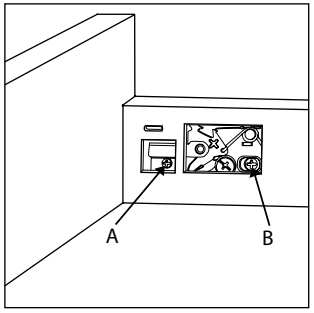
A
B

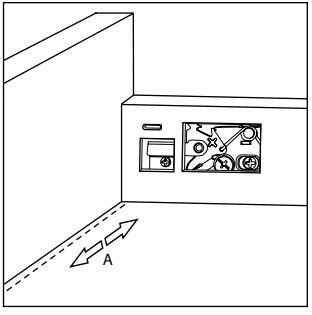
A

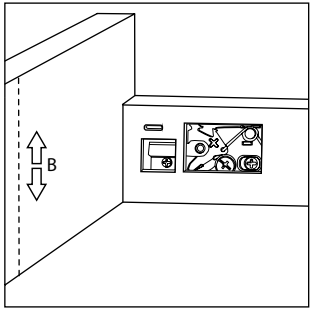
B